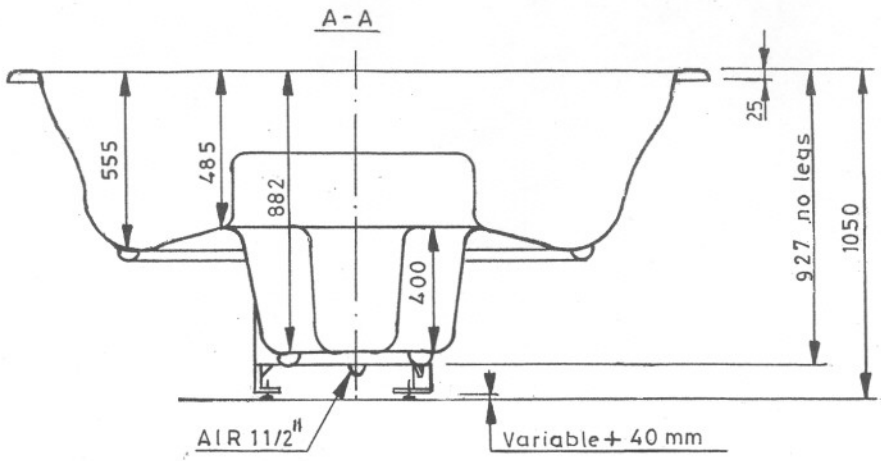


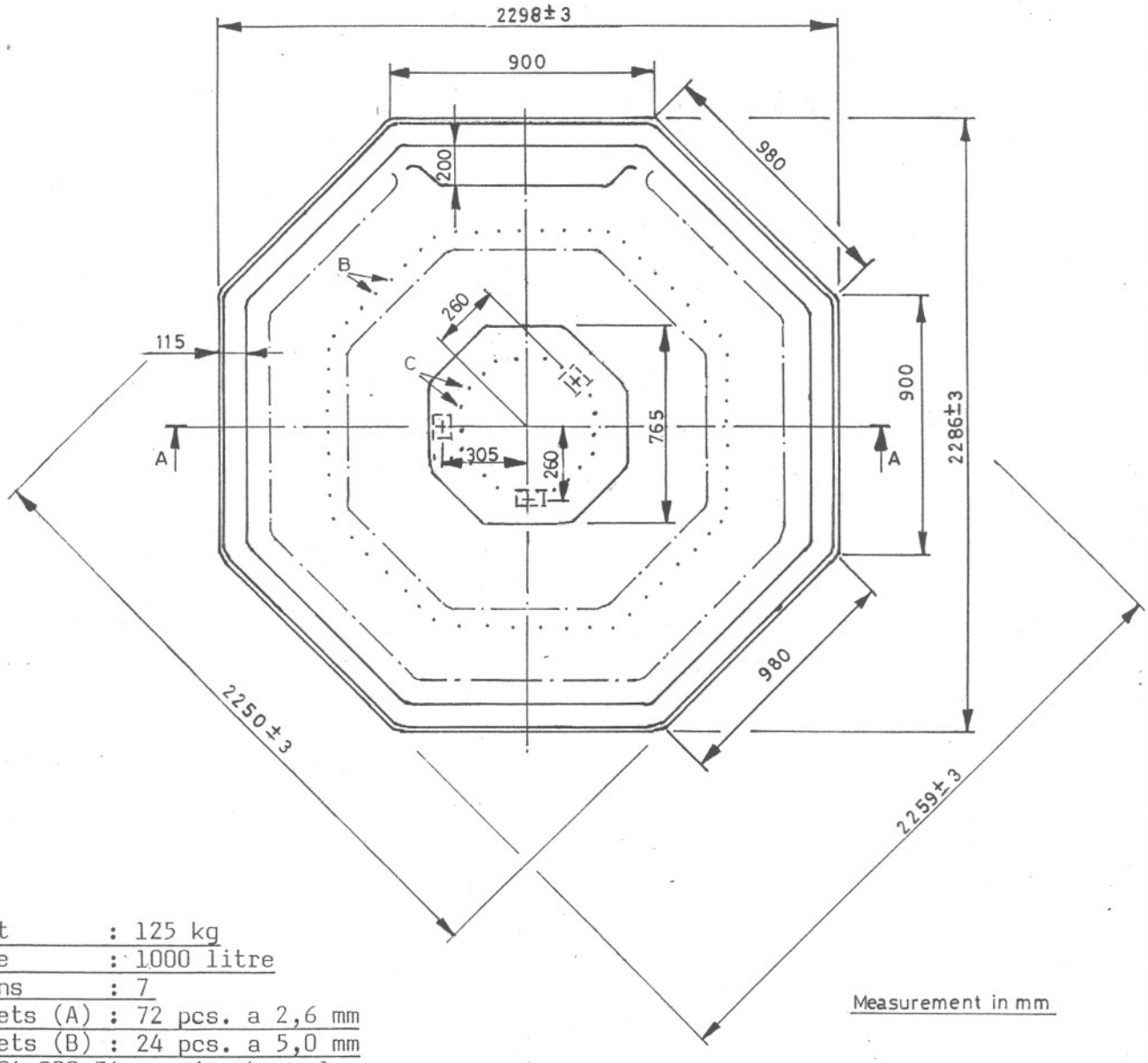


OCEAN

Weight : 125 kg
Volume : 1000 litre
Persons : 7
Air jets (A) : 72 pcs. a 2,6 mm
Air jets (B) : 24 pcs. a 5,0 mm
No. 204 900 34 no air channel
No. 204 901 34 w. air channel

Measurement in mm

Placing of supporting legs
see reverse side.

| | | | |
|---|---|---|---|
| Scandiaqualine®<br>Erhvervsvej 3 . DK-6800 Varde . Tlf. (05) 22 33 33 | | Scandispa 2300 S octagon | DATE: 08.06.89 |
| | | MEASURES: 1 : 25 | DRAWING NO: 504 901 34 |
| CORRECTIONS: | 95.03.20. Measurement chg. AK/S.H.T. | | |
| Edge changed 17.09.90. S.H.T. | 95.10.23. AIR 2" → 11/2" A.K/S.H.T. | SIGN.: A.M.L. | The right to technical alterations is reserved. |
| 95.01.31. Measurement chg. AK/S.H.T. | | | Copyright by Scandi-aqualine a.s Denmark |